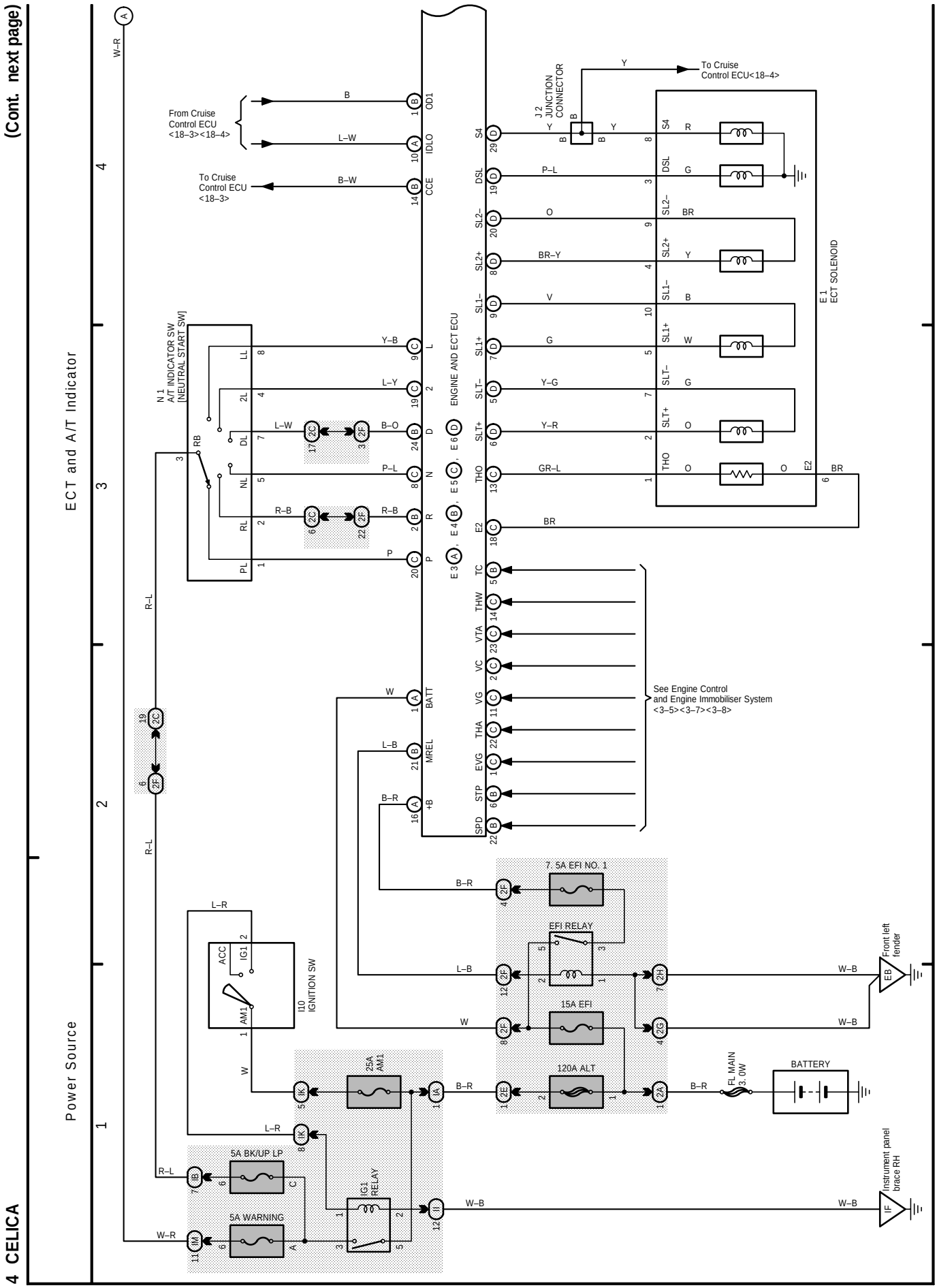
(Cont. next page)
ECT and A/T Indicator
Power Source
From Cruise Control ECU <18–3><18–4>
To Cruise Control ECU <18–3>
To Cruise Control ECU<18–4>
J 2 JUNCTION CONNECTOR
N 1 A/T INDICATOR SW [NEUTRAL START SW]
ENGINE AND ECT ECU
E 1 ECT SOLENOID
See Engine Control and Engine Immobiliser System <3–5><3–7><3–8>
7. 5A EFI NO. 1
EFI RELAY
15A EFI
120A ALT
25A AM1
IG1 RELAY
5A BK/UP LP
5A WARNING
I10 IGNITION SW
FL MAIN 3. 0W
BATTERY
Front left fender
Instrument panel brace RH

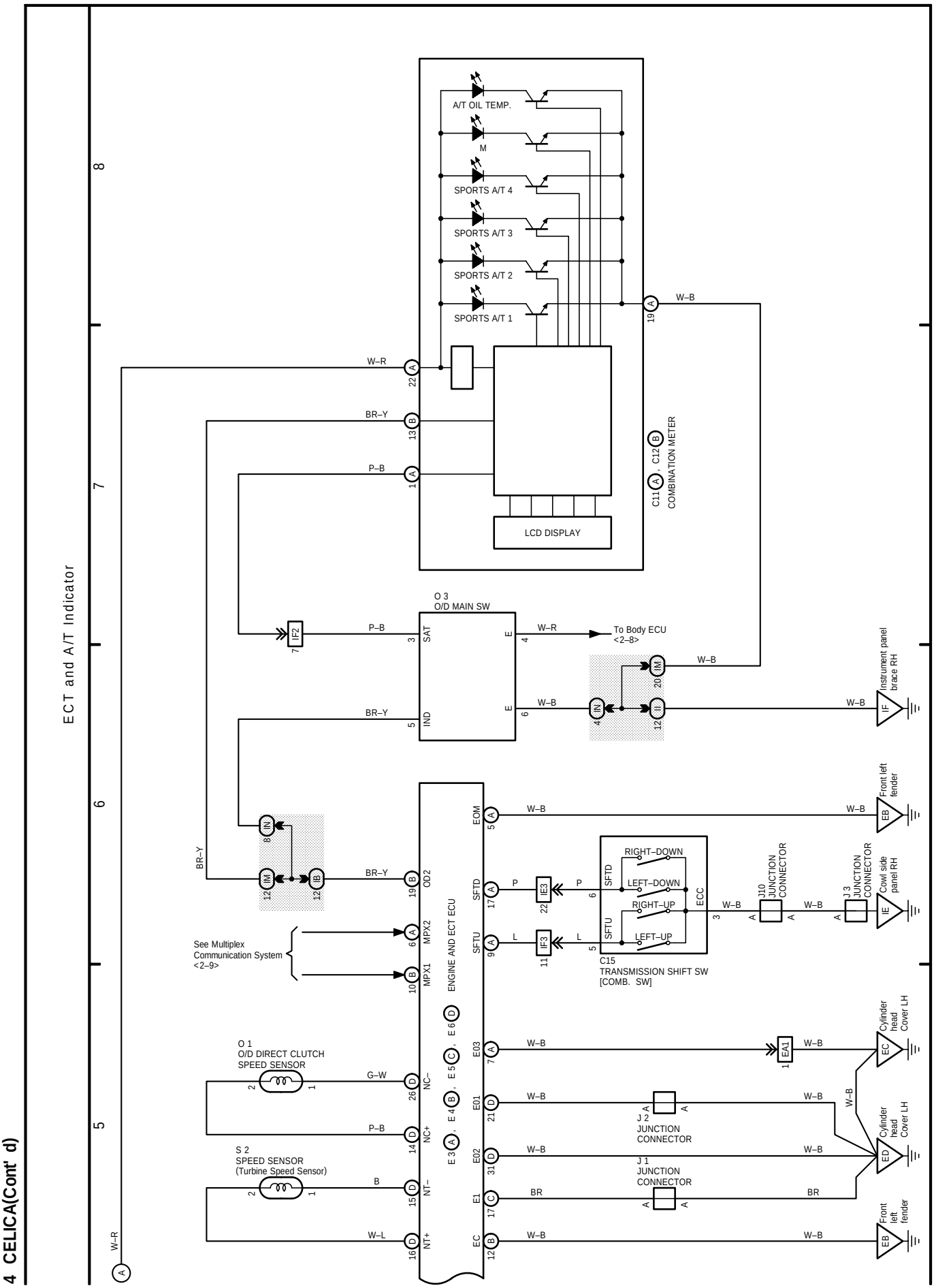
4 CELICA(Cont' d)
ECT and A/T Indicator
A/T OIL TEMP.
M
SPORTS A/T 4
SPORTS A/T 3
SPORTS A/T 2
SPORTS A/T 1
LCD DISPLAY
C11 (A), C12 (B)
COMBINATION METER
O 3
O/D MAIN SW
SAT
IND
To Body ECU
<2–8>
instrument panel brace RH
Front left fender
Cowl side panel RH
Cylinder head Cover LH
See Multiplex Communication System <2–9>
ENGINE AND ECT ECU
MPX1
MPX2
OD2
NC+
NC–
NT+
NT–
SFTD
SFTU
EOM
E03
E01
E02
E1
EC
ECC
RIGHT–DOWN
LEFT–DOWN
RIGHT–UP
LEFT–UP
C15
TRANSMISSION SHIFT SW
[COMB. SW]
J10
JUNCTION CONNECTOR
J 3
JUNCTION CONNECTOR
J 2
JUNCTION CONNECTOR
J 1
JUNCTION CONNECTOR
O 1
O/D DIRECT CLUTCH SPEED SENSOR
S 2
SPEED SENSOR
(Turbine Speed Sensor)
W–B
W–R
BR–Y
P–B
G–W
B
W–L
BR